DO NOT SCALE

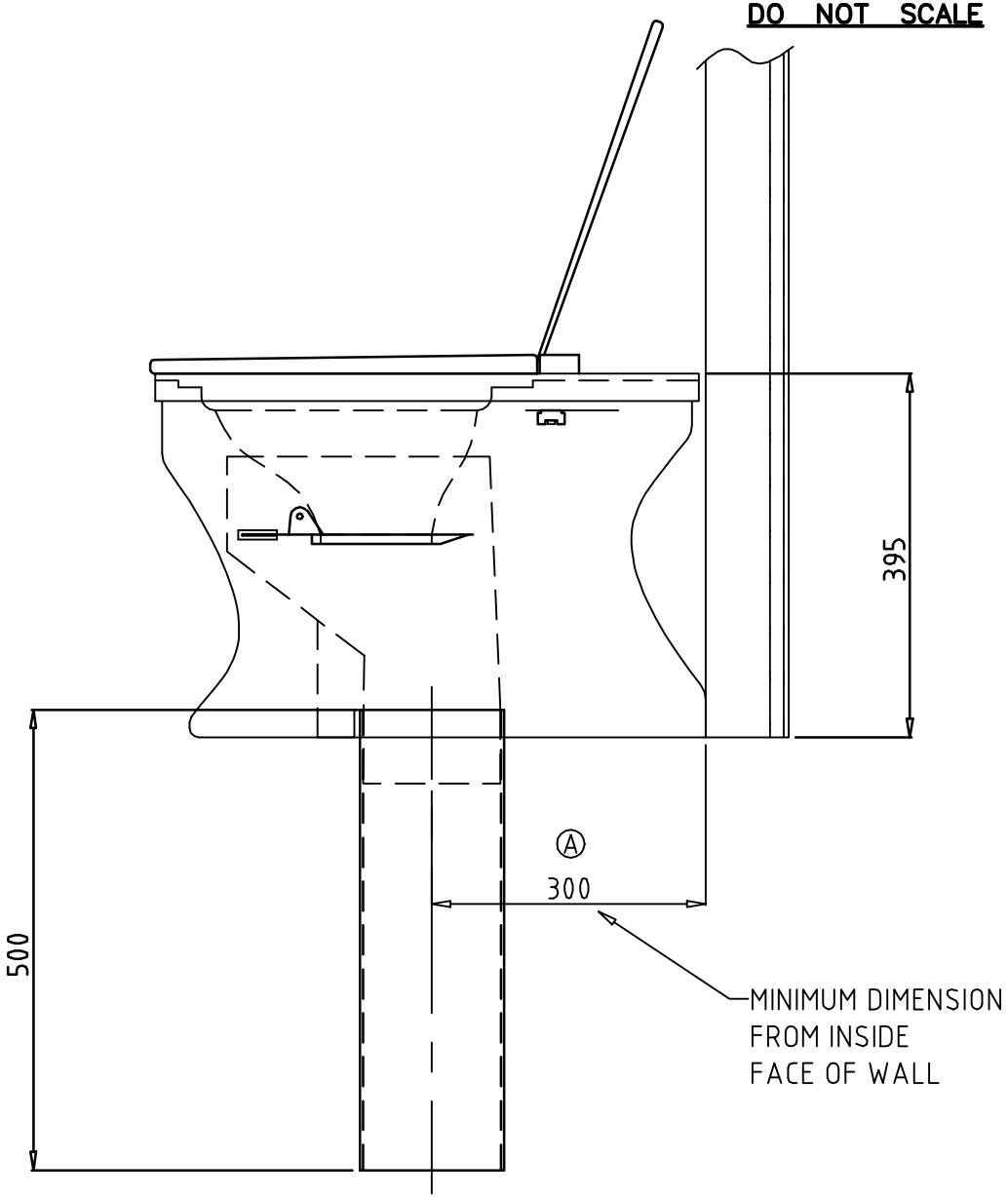

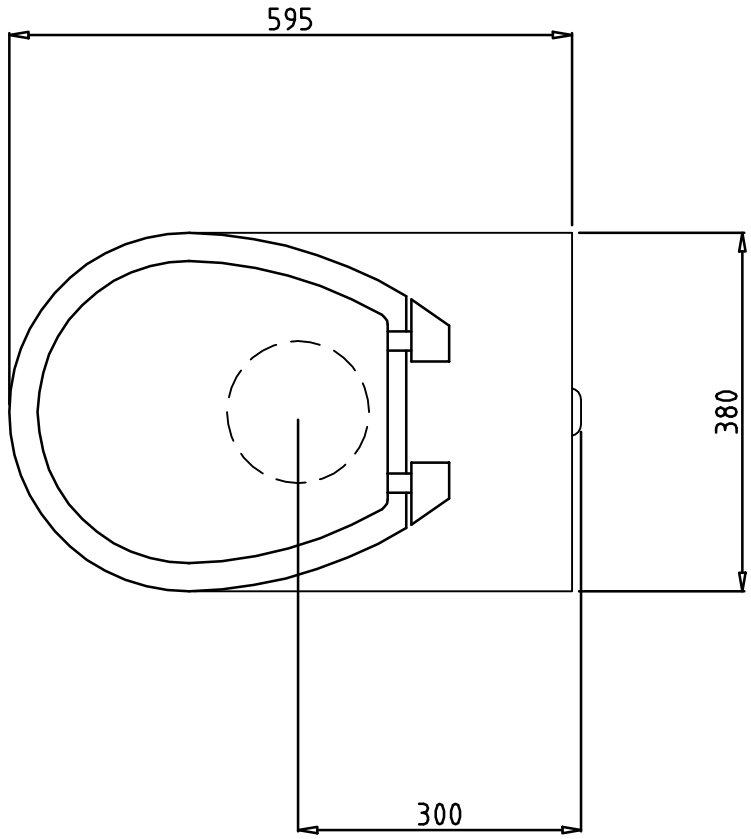

No.	DATE	BY	DESCRIPTION	GOUGH
			REVISION	APPROV.

GOUGH PLASTICS AUSTRALIA
Custom Rotational Moulders

Gough Industries Pty. Ltd.
833 Ingham Road
Bohle, Townsville
P.O. Box 1258, Aitkenvale, Qld. 4814.
Telephone 07 47747606
Facsimile 07 47747608
A.C.N. 010 028 547

This drawing remains the property of Gough Industries Pty. Ltd. It is subject to Gough Industries Pty. Ltd.'s recall and must not be reproduced in part or whole or it's contents divulged to third parties without prior written approval from Gough Industries Pty Limited.

	Signature	Date
DRAWN	S.NAGY	31-5-01
DRN. CHK		
ENGINEER		
ENG. CHK		
SUBMITTED FOR APPR.		
Eng. APPROVAL		

HYBRID TOILET SYSTEM – MICROFLUSH PEDESTAL
GENERAL ARRANGEMENT

SCALE 1:8 | A4 | Gough Plastics Drg. No. GTL-0000-18

EDIT DATE= | CAD FILE : H:/HTS/MISC/